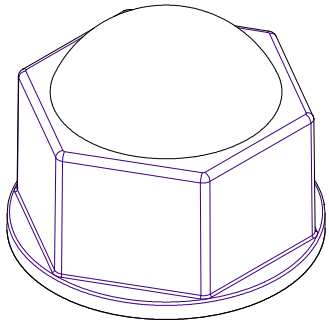

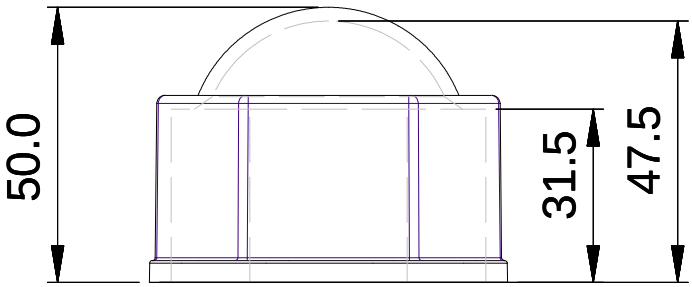
50.0
31.5
47.5

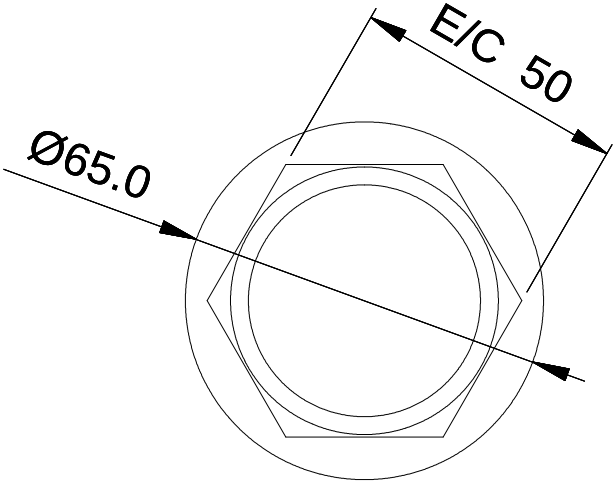
E/C 50
Ø65.0