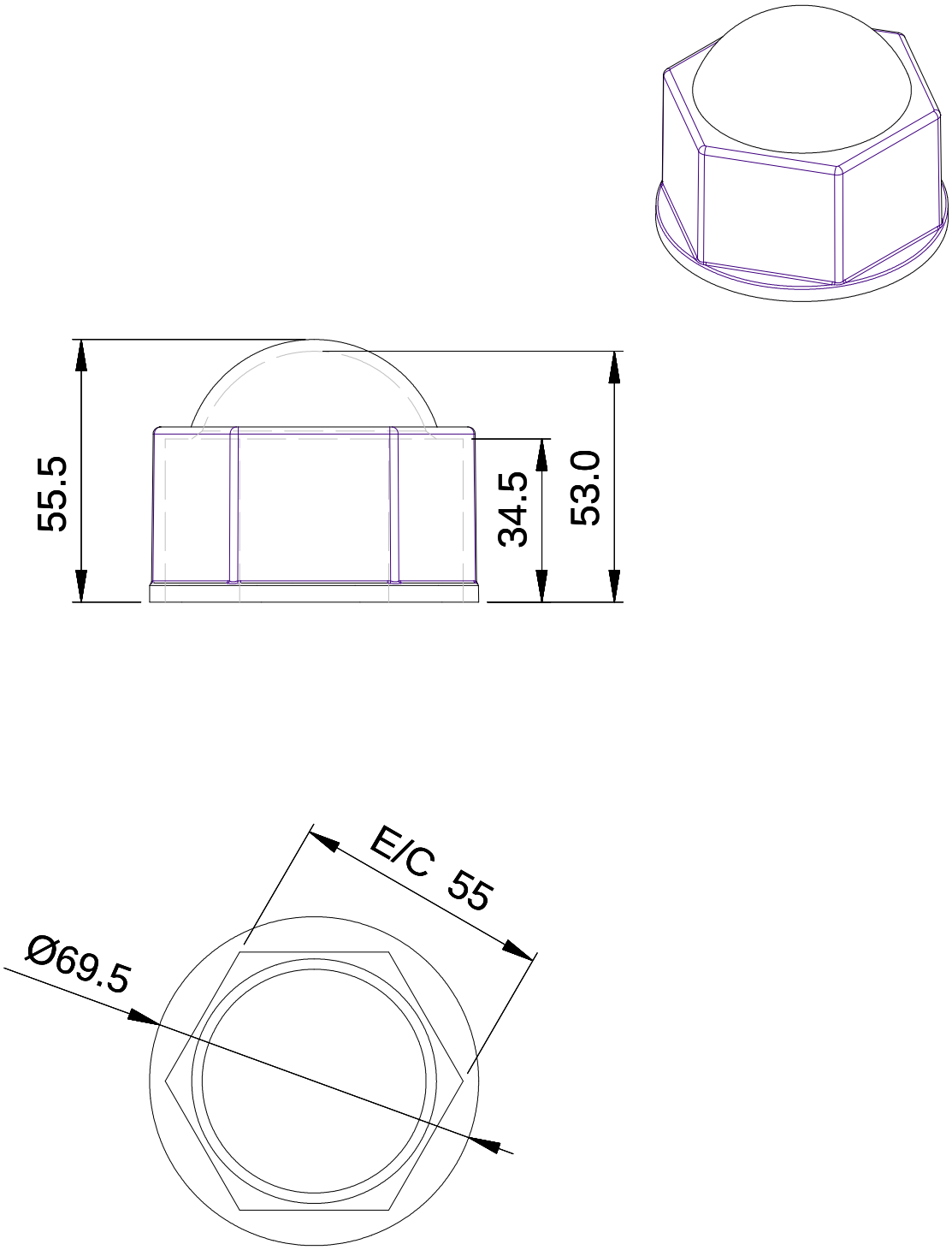
55.5
34.5
53.0
E/C 55
Ø69.5