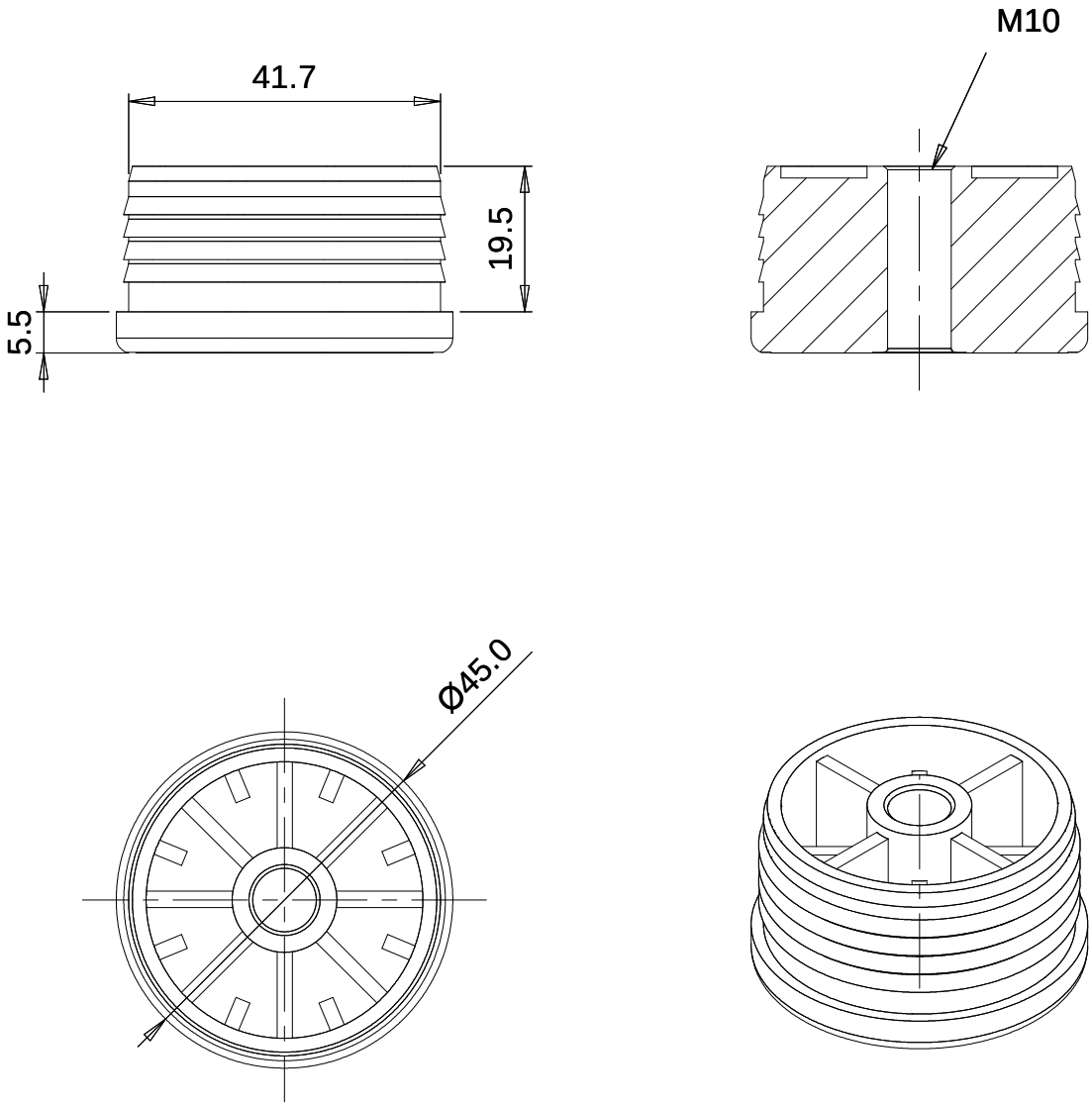
41.7
19.5
5.5
M10
Ø45.0