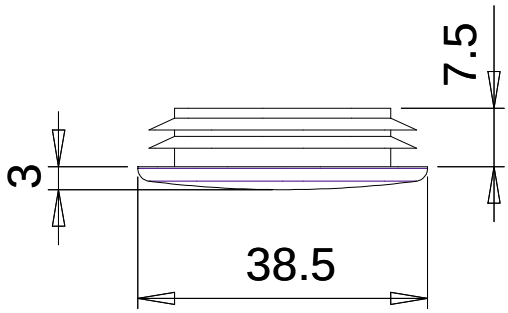
7.5
3
38.5

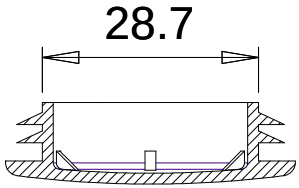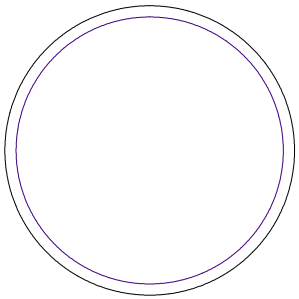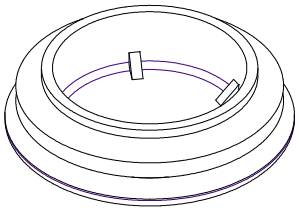
28.7