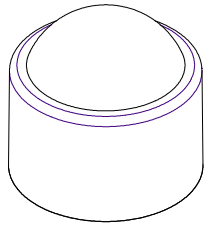

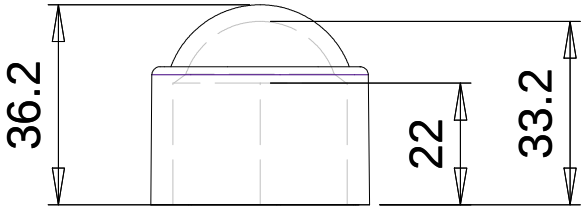
36.2
22
33.2

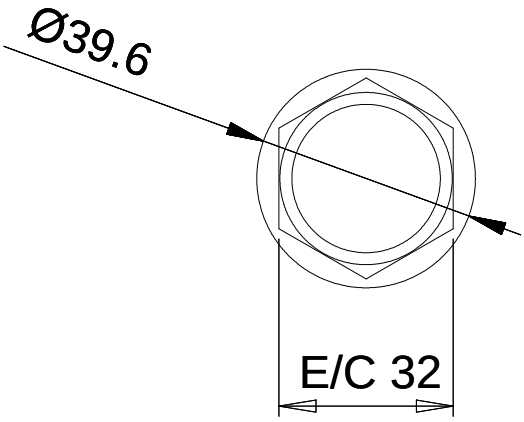
Ø39.6
E/C 32