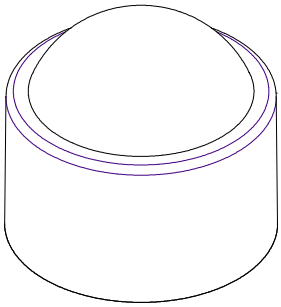

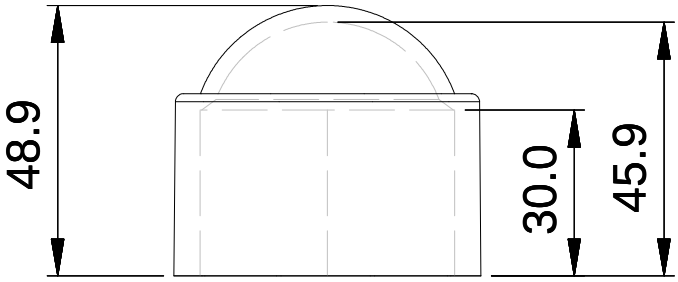
48.9
30.0
45.9

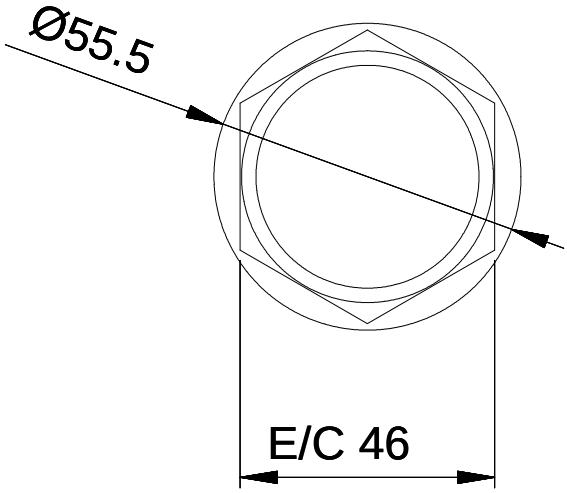
Ø55.5
E/C 46