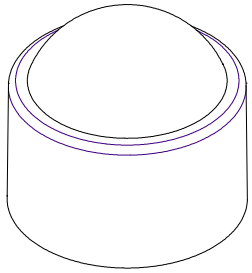

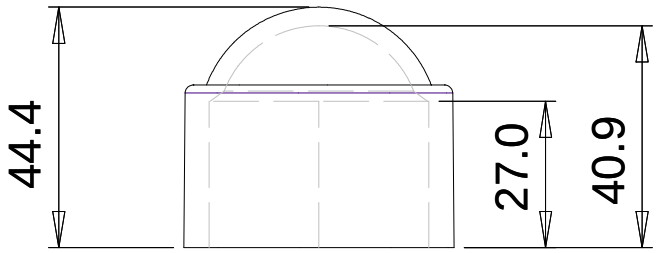
44.4
27.0
40.9

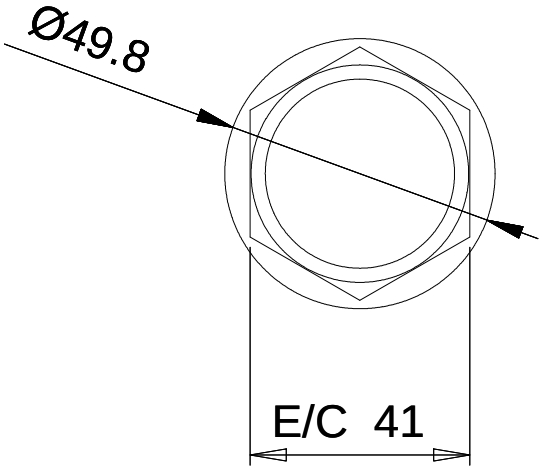
Ø49.8
E/C 41