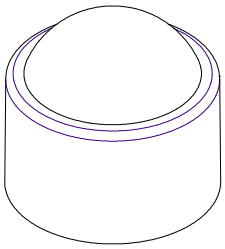

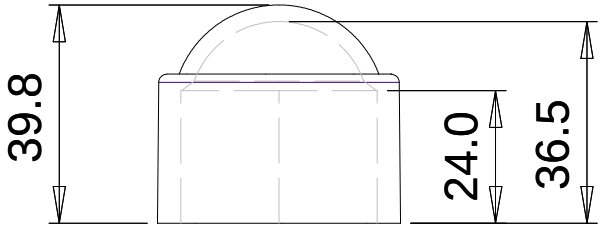
39.8
24.0
36.5

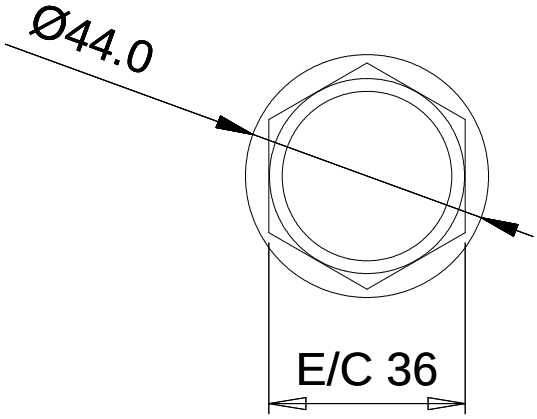
Ø44.0
E/C 36