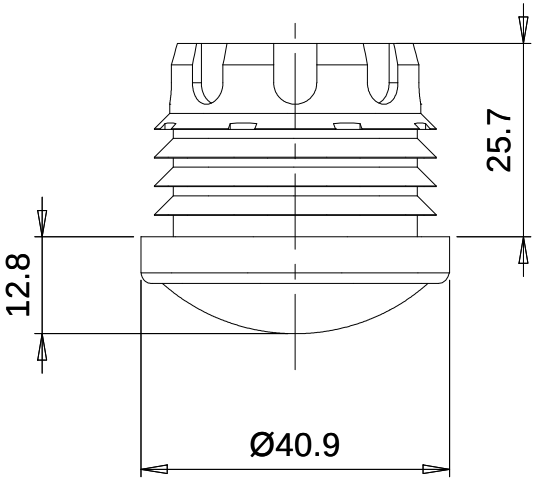
25.7
12.8
Ø40.9

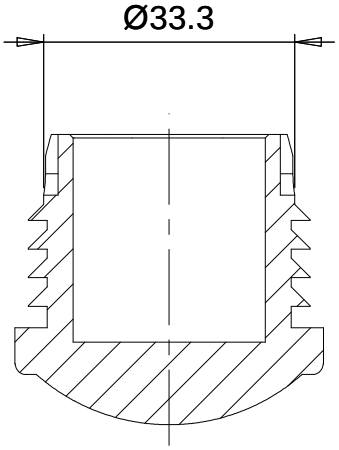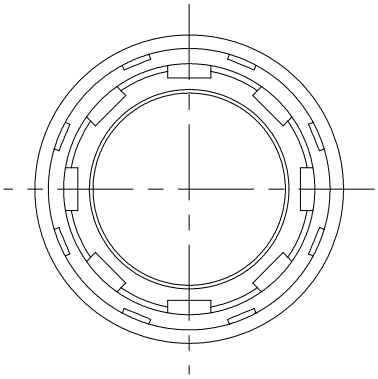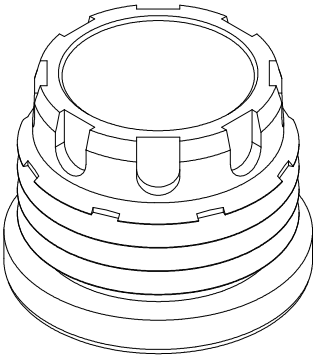
Ø33.3