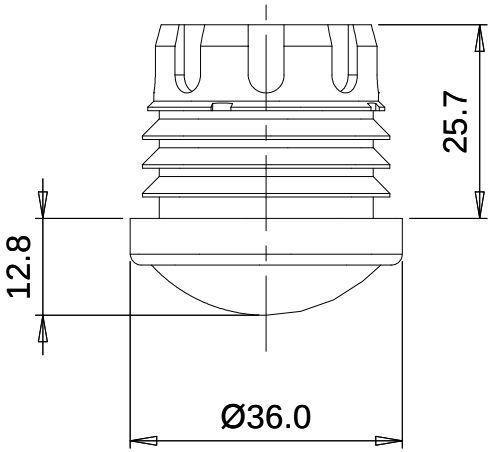
25.7
12.8
Ø36.0

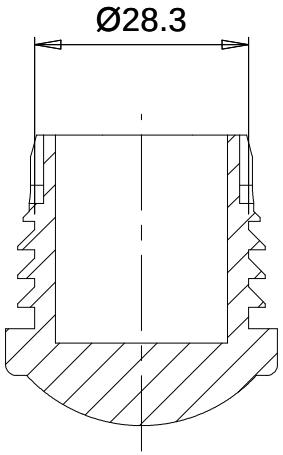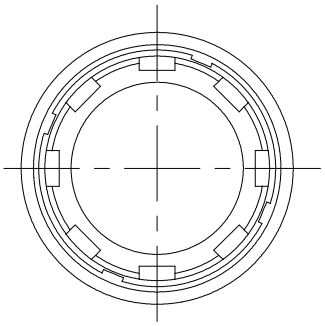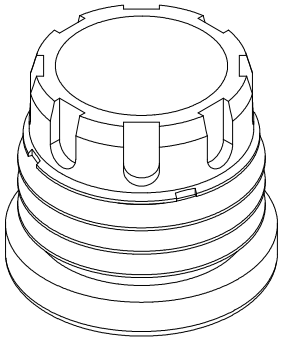
Ø28.3