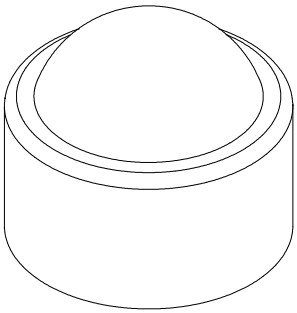

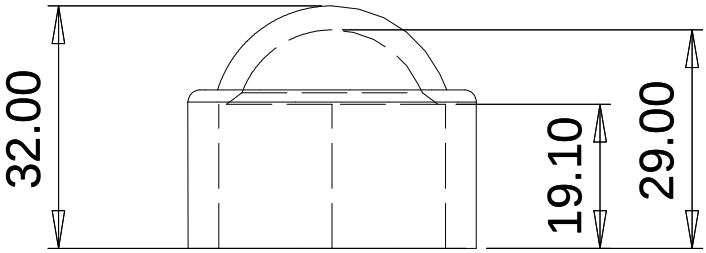
32.00
19.10
29.00

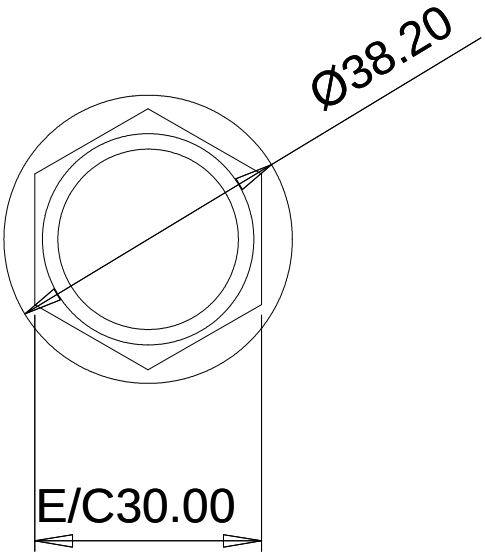
Ø38.20
E/C30.00