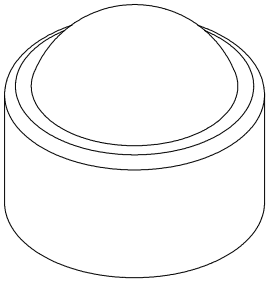

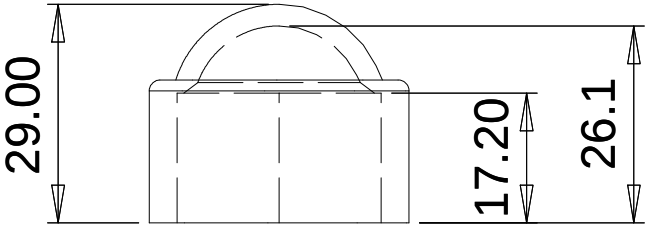
29.00
17.20
26.1

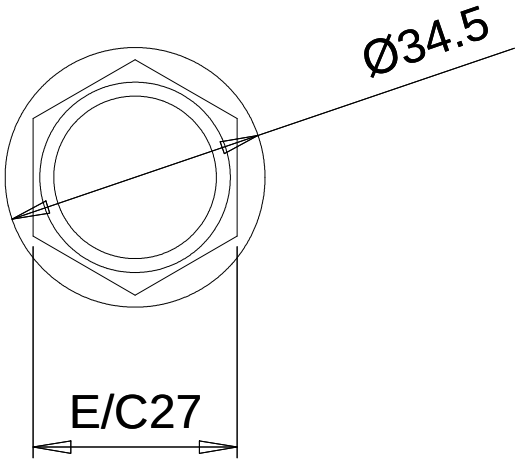
Ø34.5
E/C27