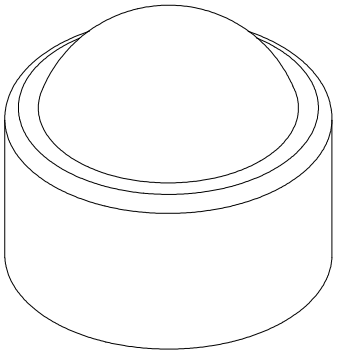

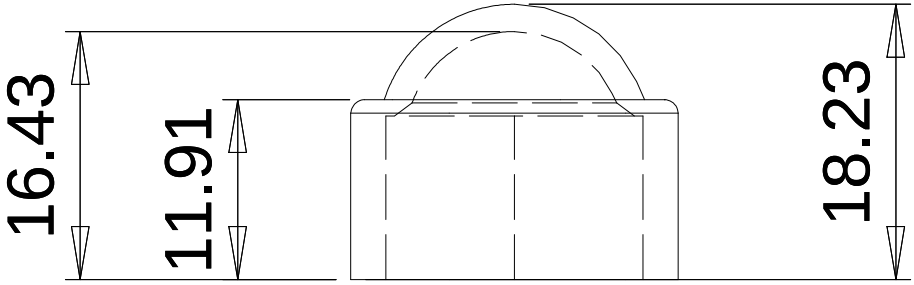
16.43
11.91
18.23

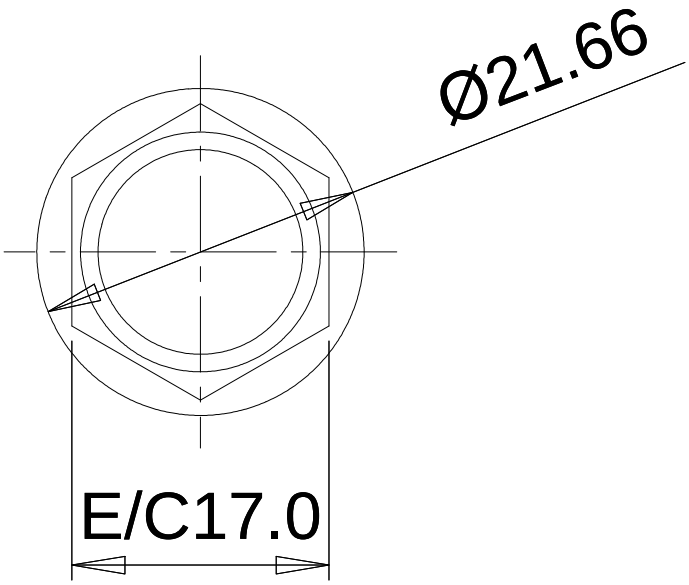
Ø21.66
E/C17.0