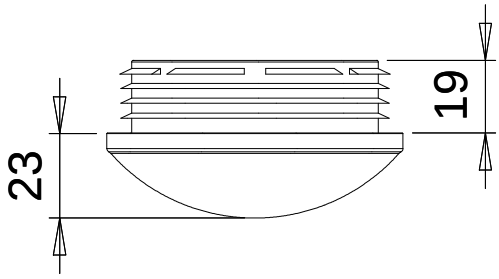
19
23

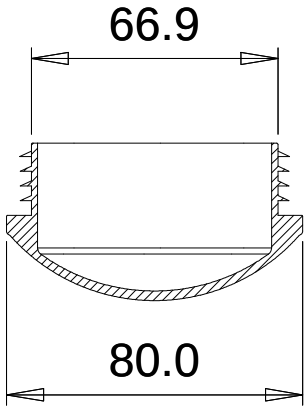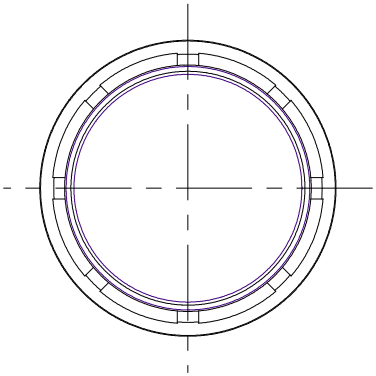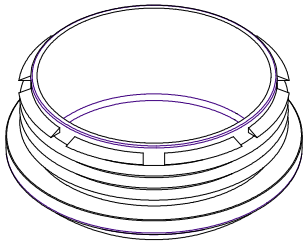
66.9
80.0