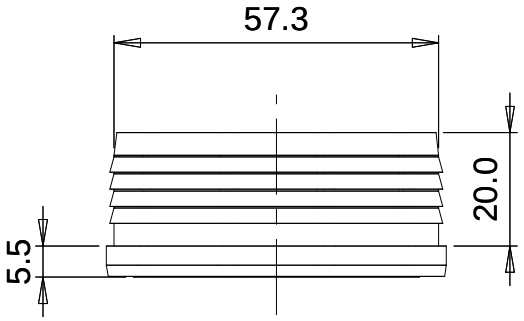
57.3
20.0
5.5

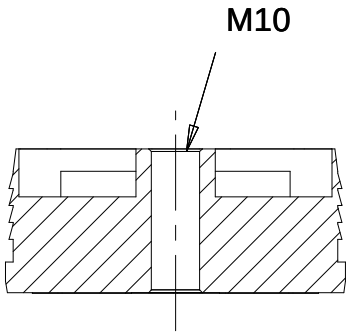
M10

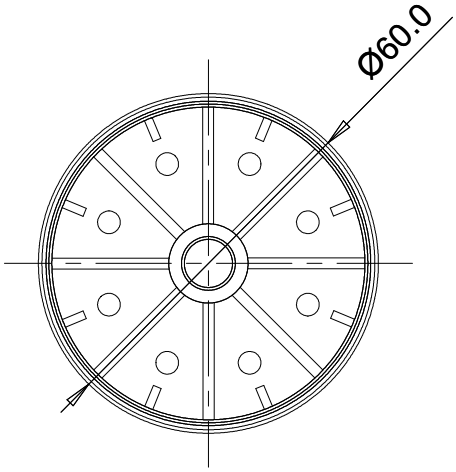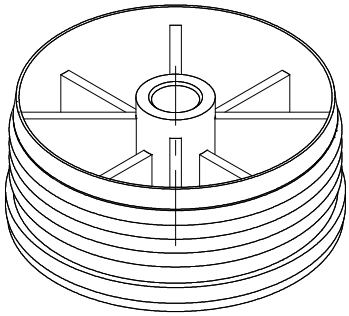
Ø60.0