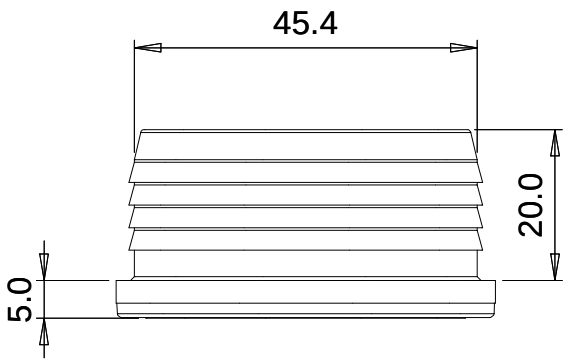
45.4
20.0
5.0

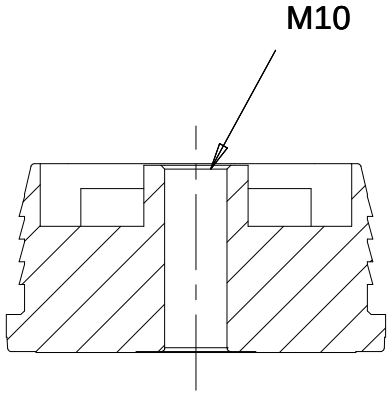
M10

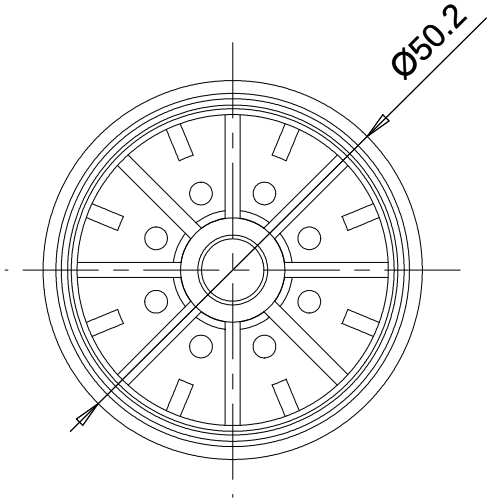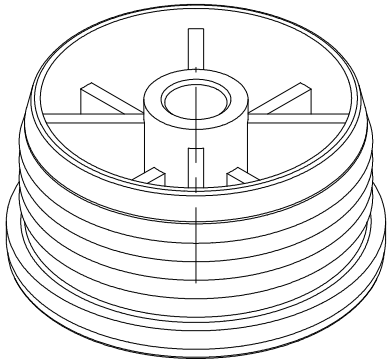
Ø50.2