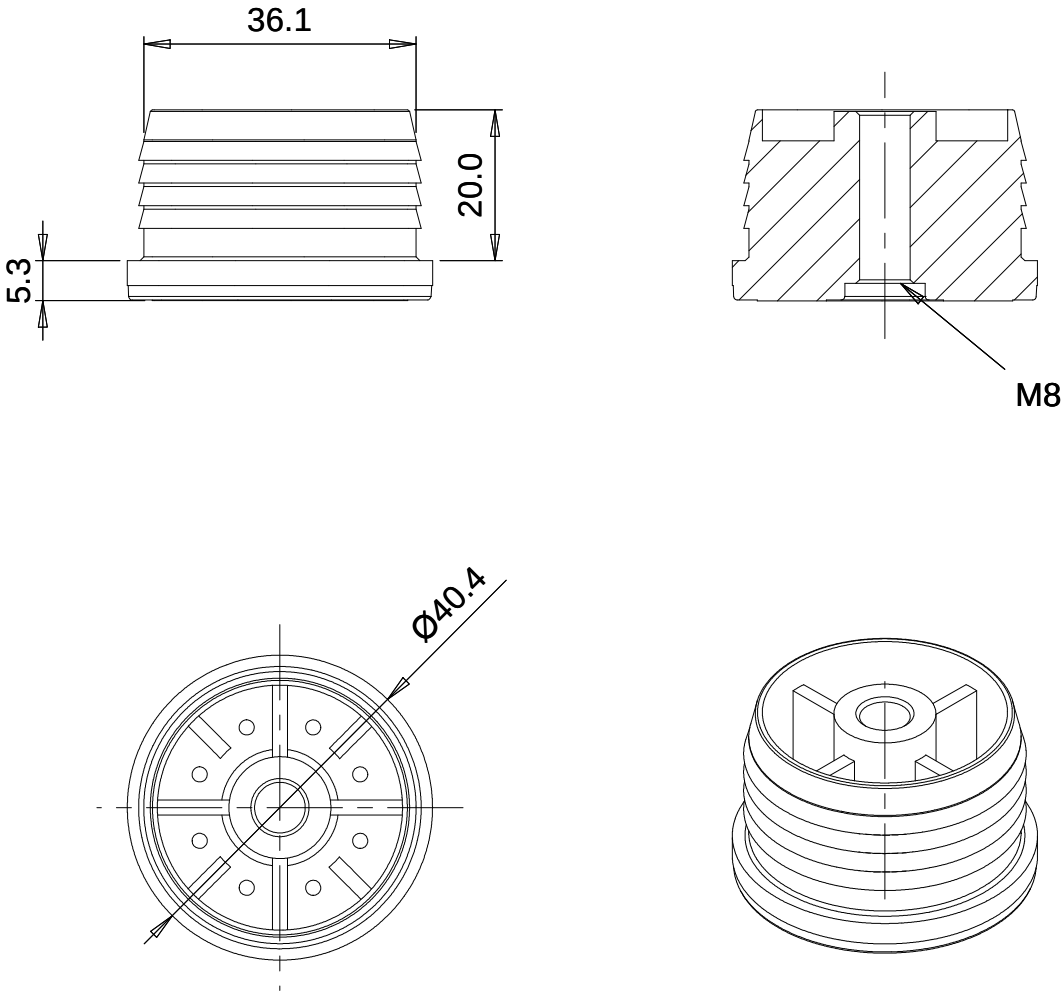
36.1
20.0
5.3
M8
Ø40.4