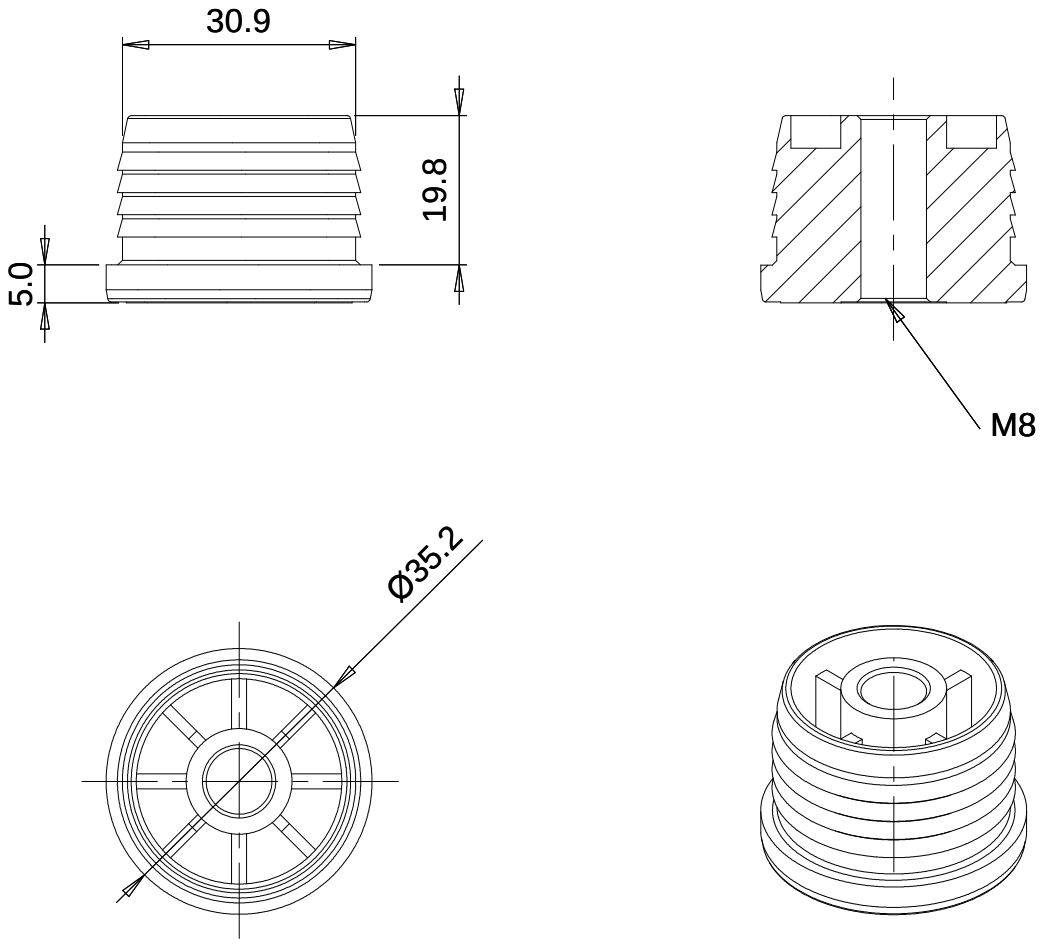
30.9
19.8
5.0
M8
Ø35.2