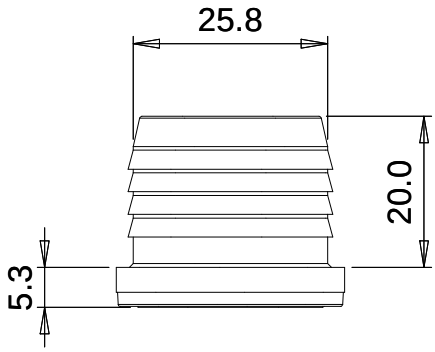
25.8
20.0
5.3

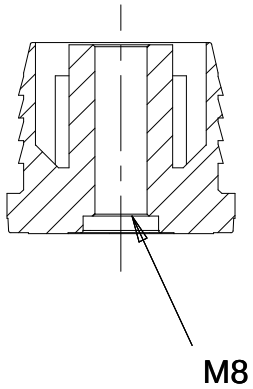
M8

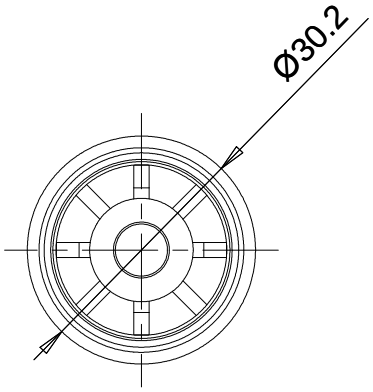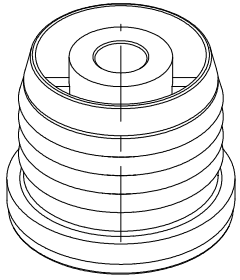
Ø30.2