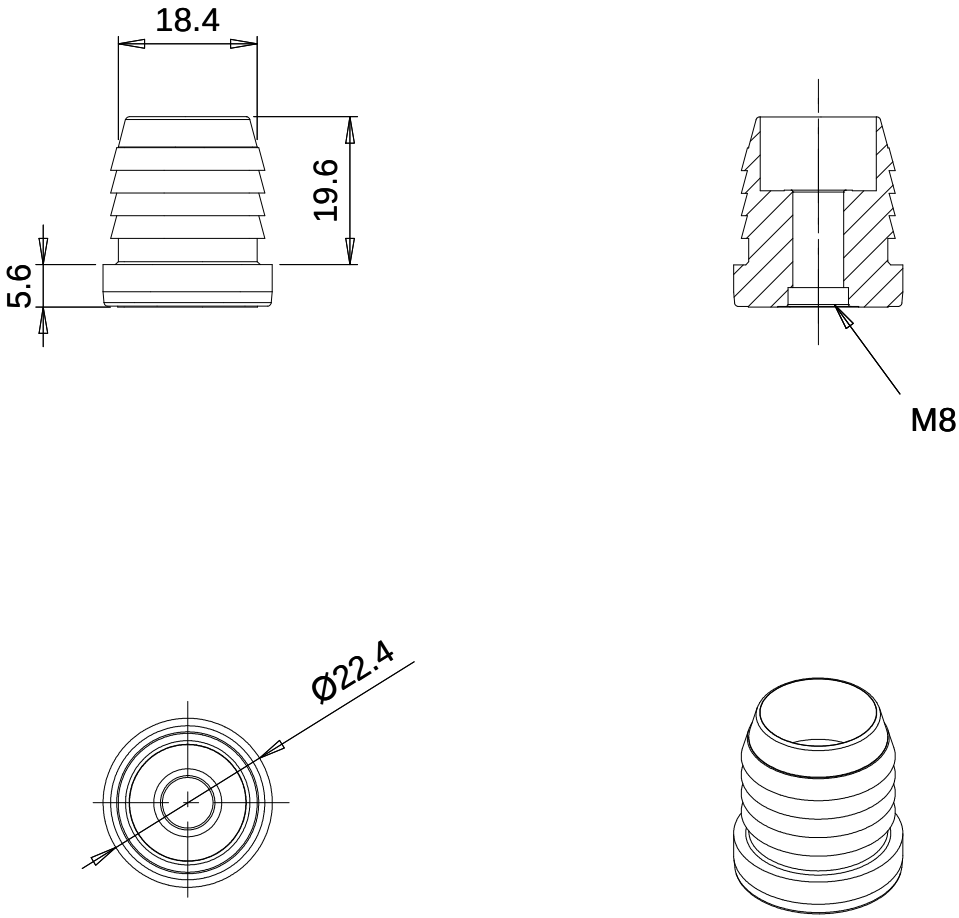
18.4
19.6
5.6
M8
Ø22.4