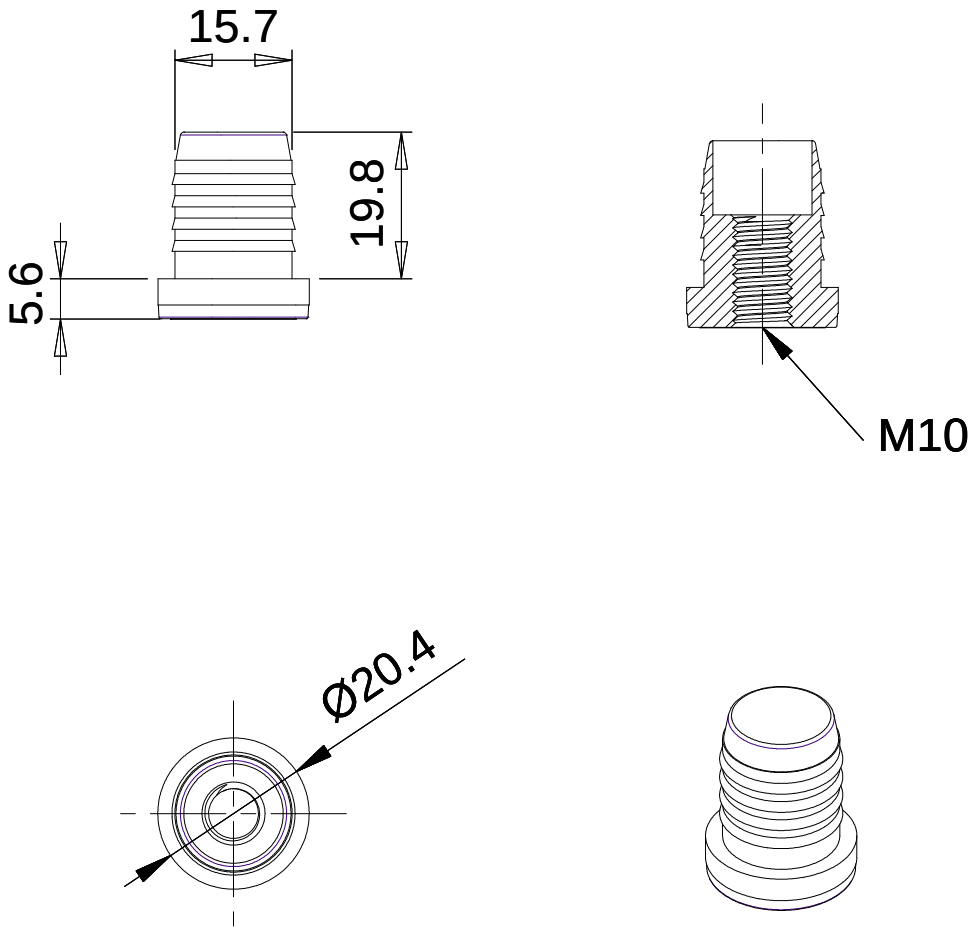
15.7
19.8
5.6
M10
Ø20.4