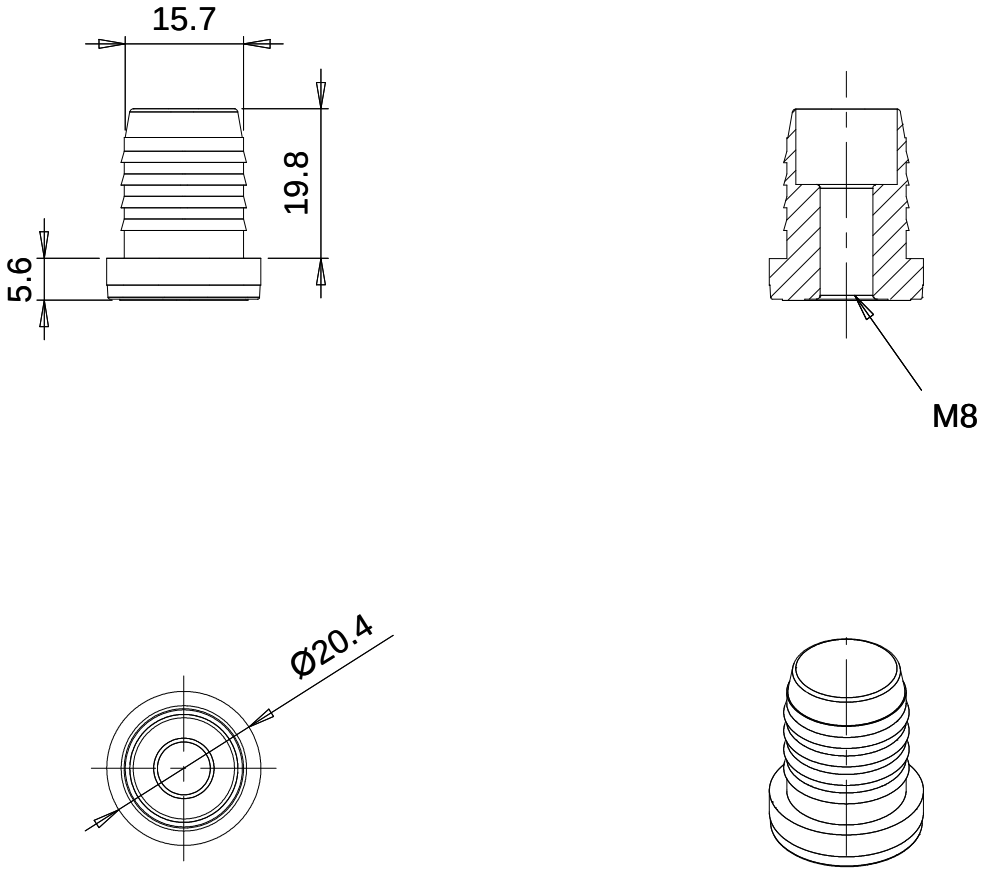
15.7
19.8
5.6
M8
Ø20.4