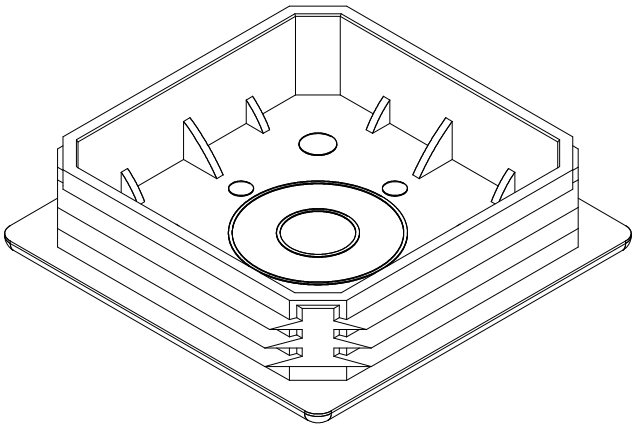

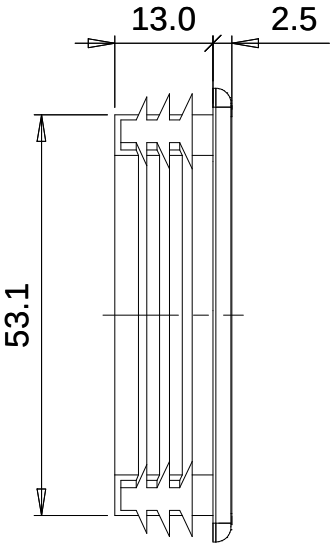
13.0
2.5
53.1

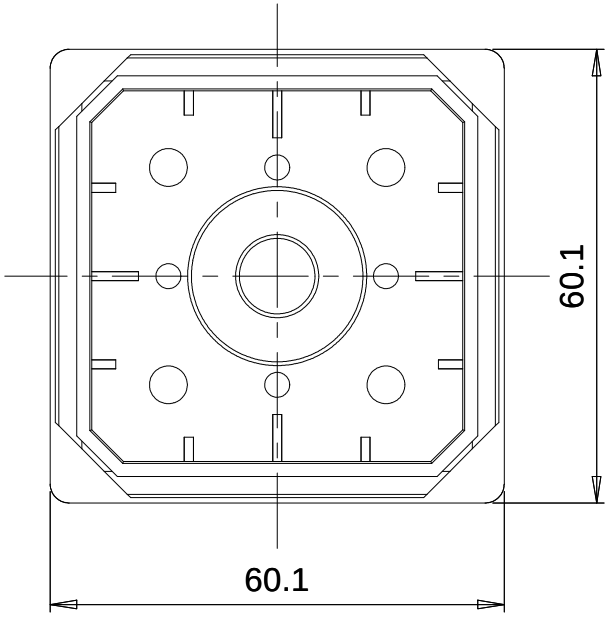
60.1
60.1