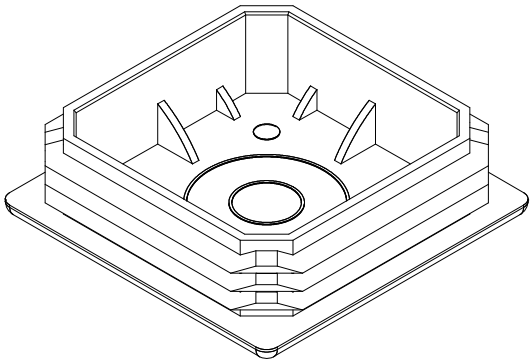

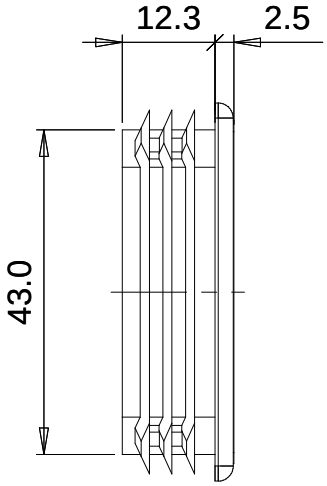
12.3
2.5
43.0

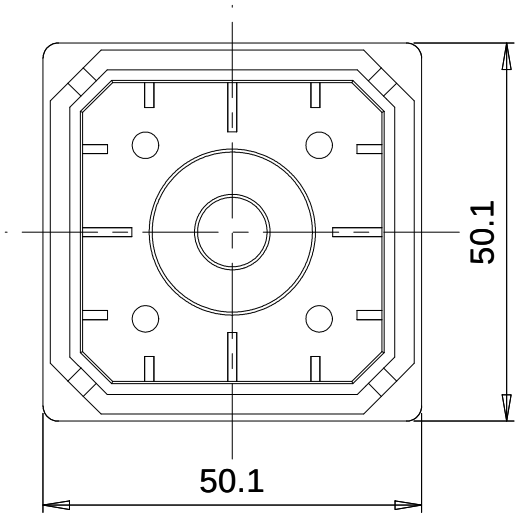
50.1
50.1