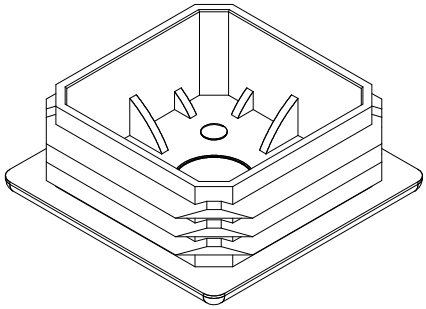

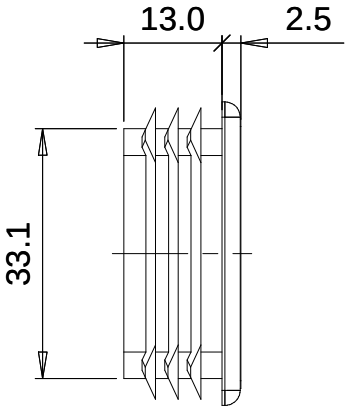
13.0
2.5
33.1

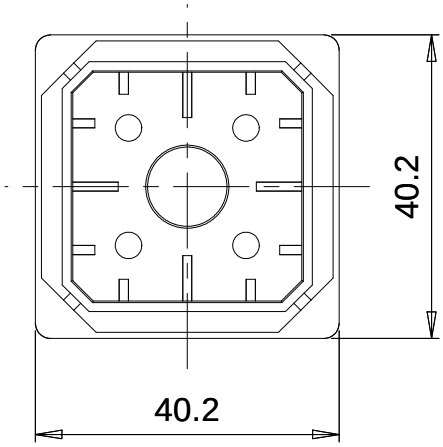
40.2
40.2