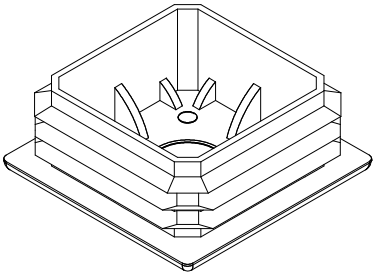

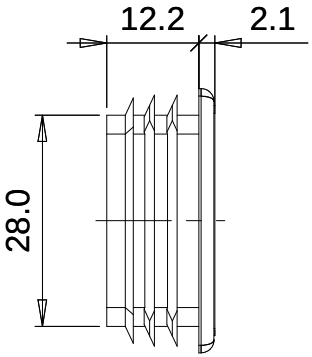
12.2
2.1
28.0

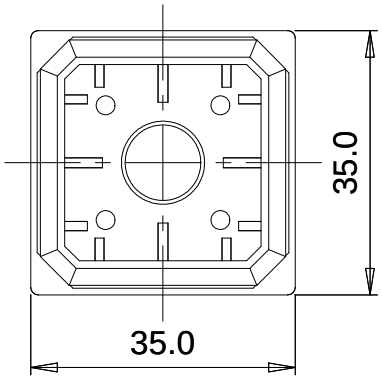
35.0
35.0