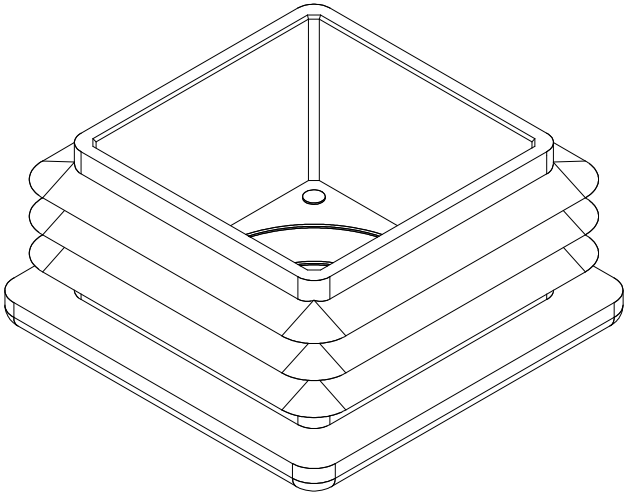

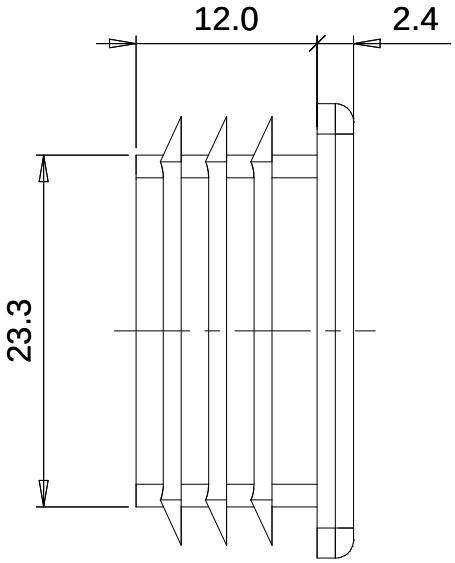
12.0
2.4
23.3

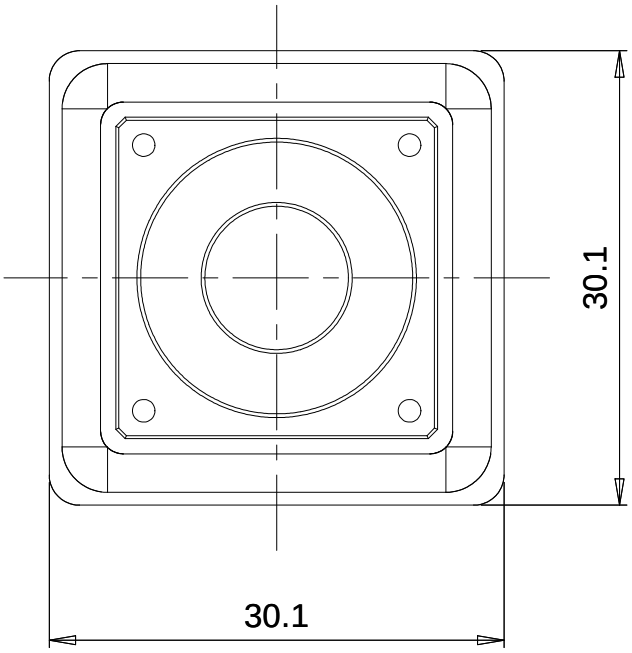
30.1
30.1