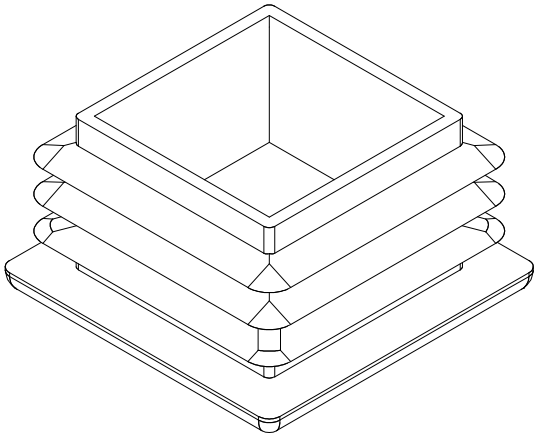

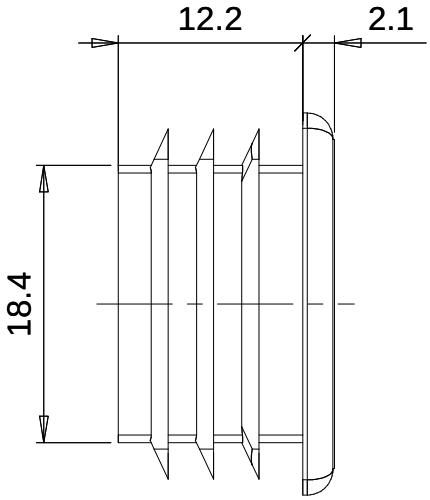
12.2
2.1
18.4

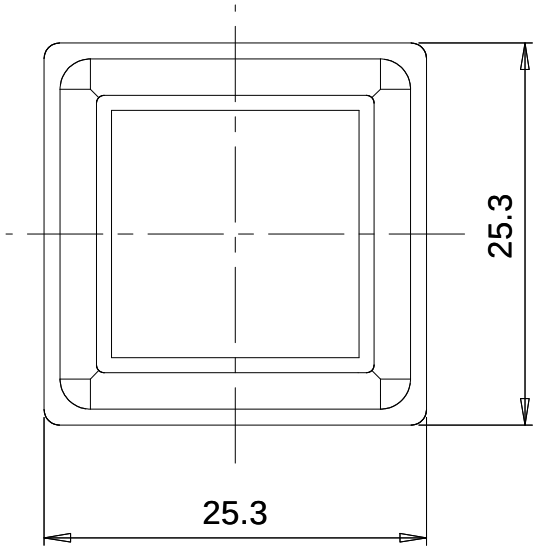
25.3
25.3