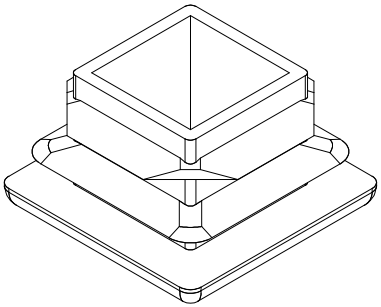

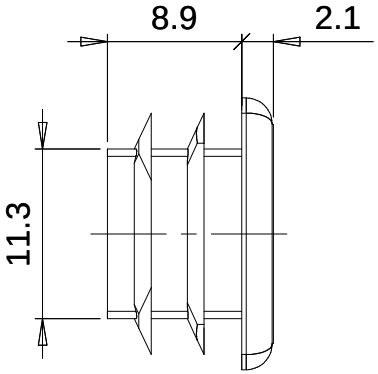
8.9
2.1
11.3

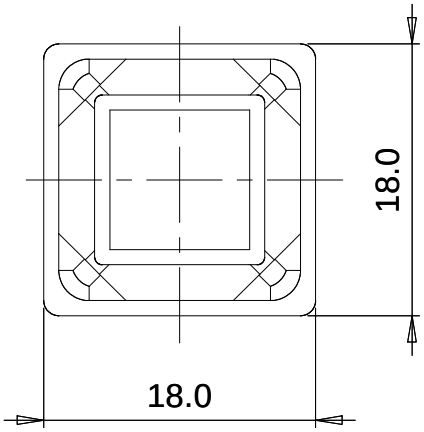
18.0
18.0