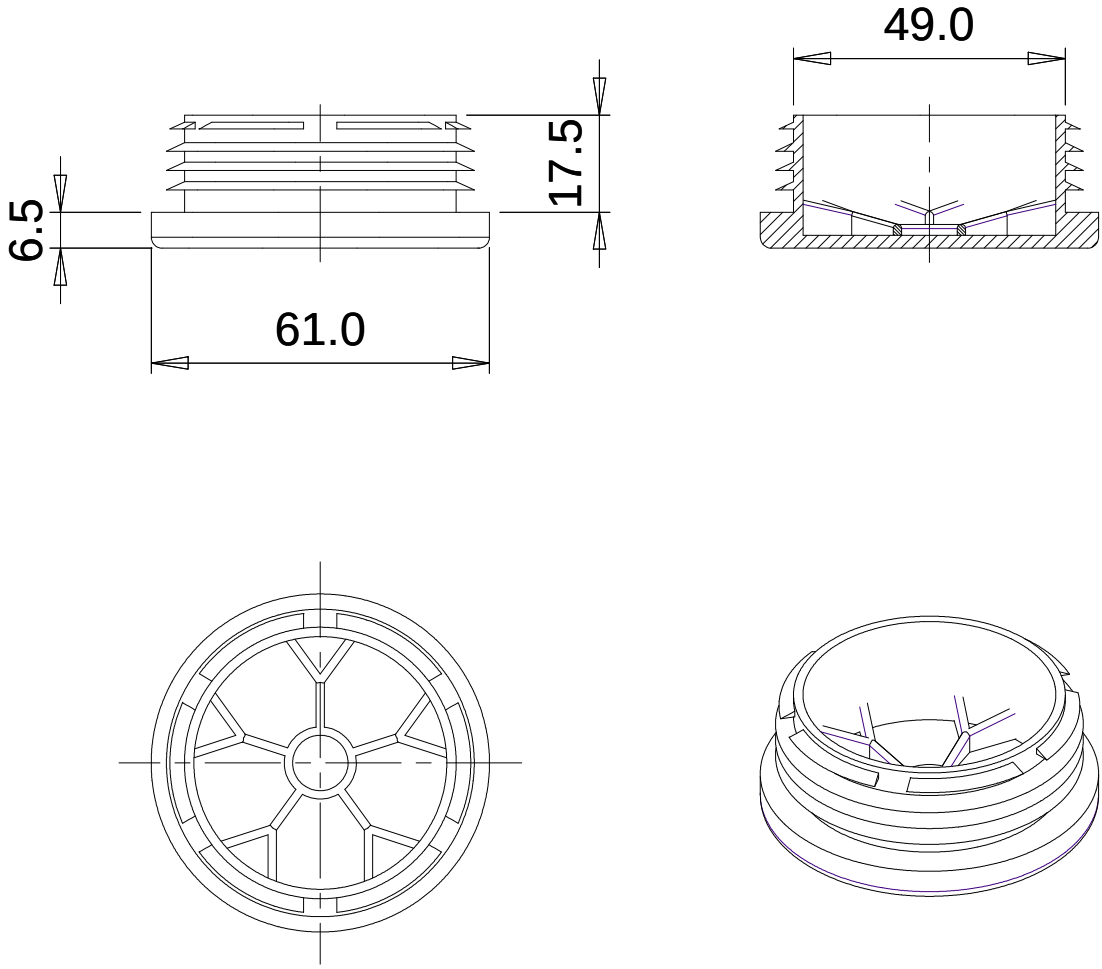
49.0
17.5
6.5
61.0