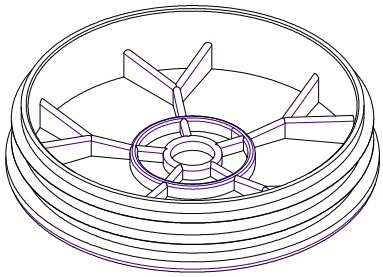

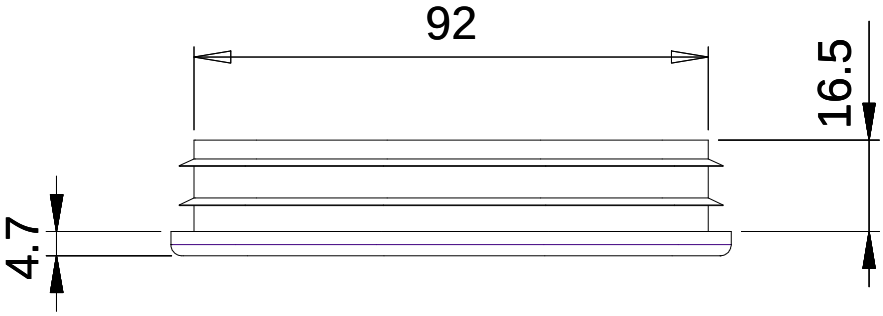
92
16.5
4.7

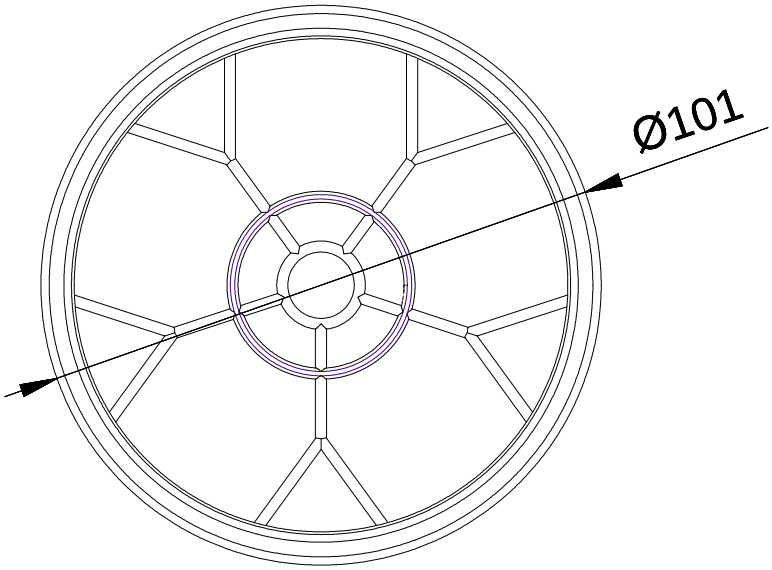
Ø101