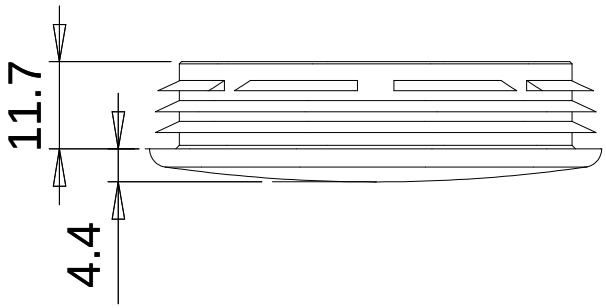
11.7
4.4

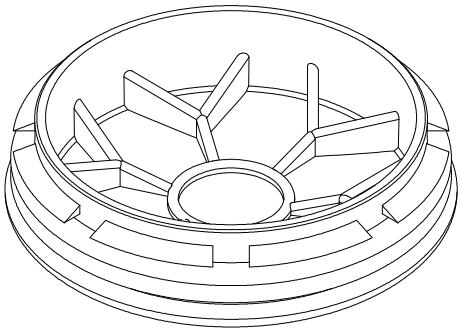

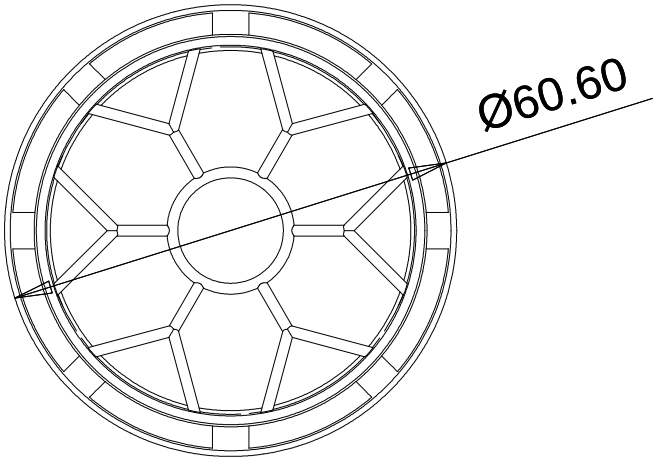
Ø60.60