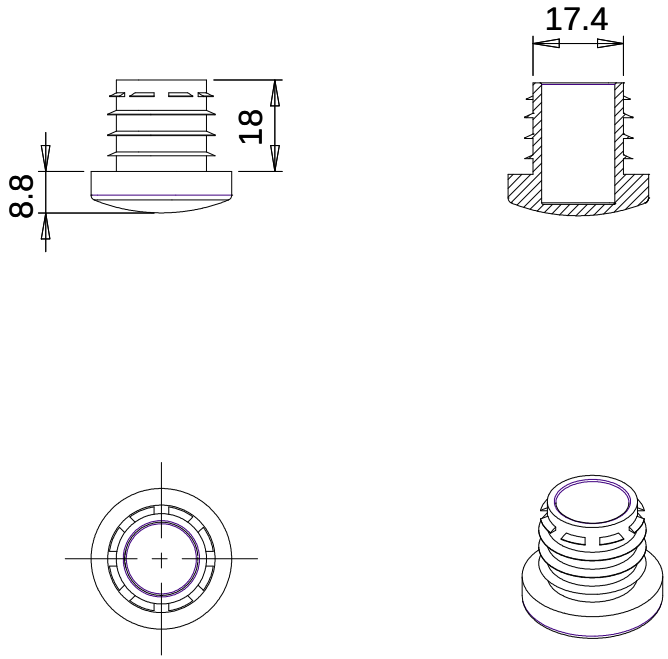
17.4
18
8.8